PART #: A1050-40

REVISIONS			
REV	DESCRIPTION	DATE	APPROVED

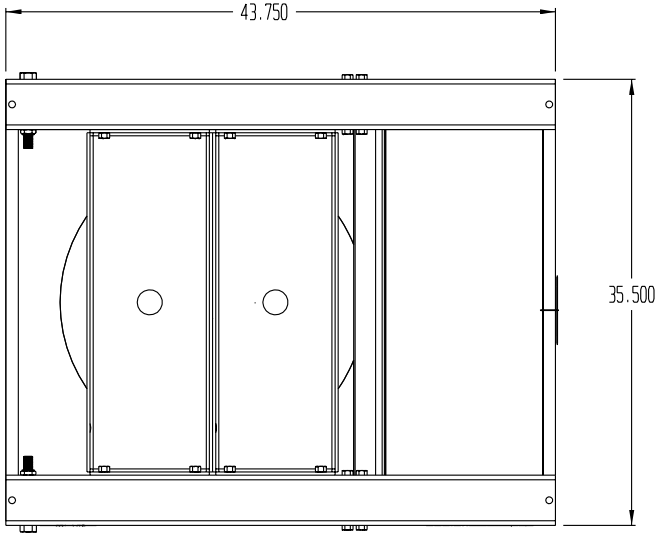

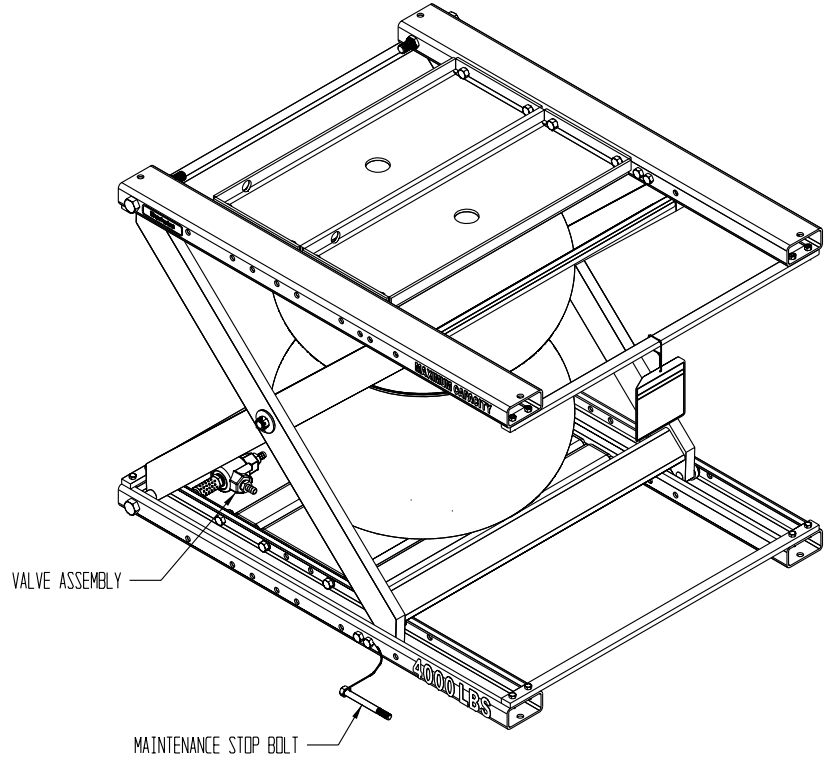

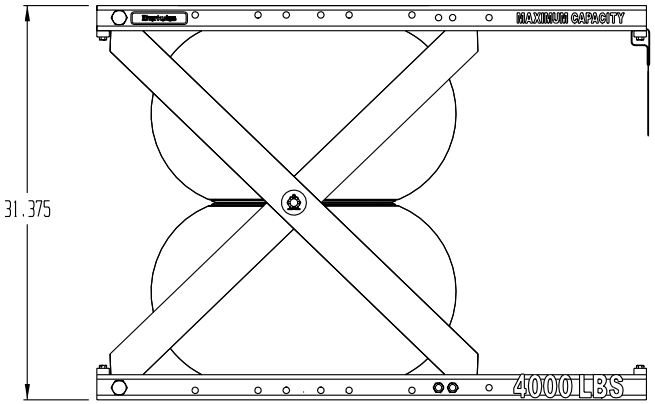

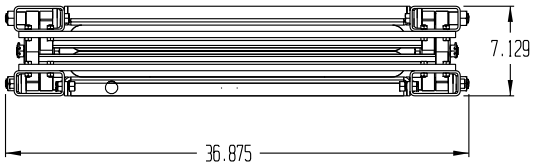

LIFT SPECIFICATIONS

CAPACITY:	4000 LBS
CONTROLLER:	NONE
CONTROLLER MOUNT:	NONE
INTERNAL VALVE:	NON PILOT EXHAUST
SAFETY FEATURES:	MAINTENANCE STOP
SKIRT:	NONE
COLOR:	MULTI

POS	PART#	MATERIAL#	DESCRIPTION	QTY	UNIT

TOLERANCES UNLESS OTHERWISE NOTED
.X ± .250
.XX ± .125
.XXX ± 0.030
.XXXX ± 0.0050
ANGLE ± 1°

herkules™
2760 RIDGEWAY COURT ○ WALLED LAKE, MI. 48390-1662

TITLE: LIFT MODULE A1050-40

DRN: CP 09-19-06 | MATERIAL:

PART #: A1050-40 | CHKD. BY: | DWG NO.: 02064131 | REV: | REF: