PART #: V963

REVISIONS			
REV	DESCRIPTION	DATE	APPROVED

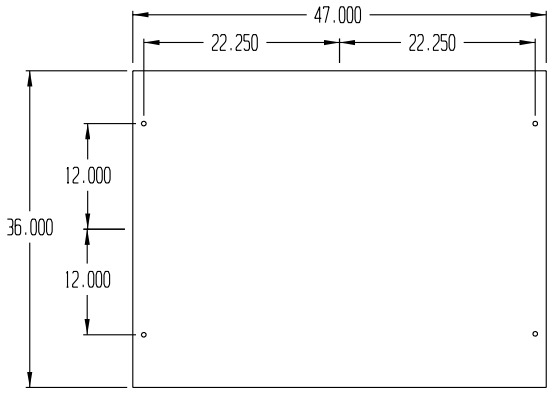

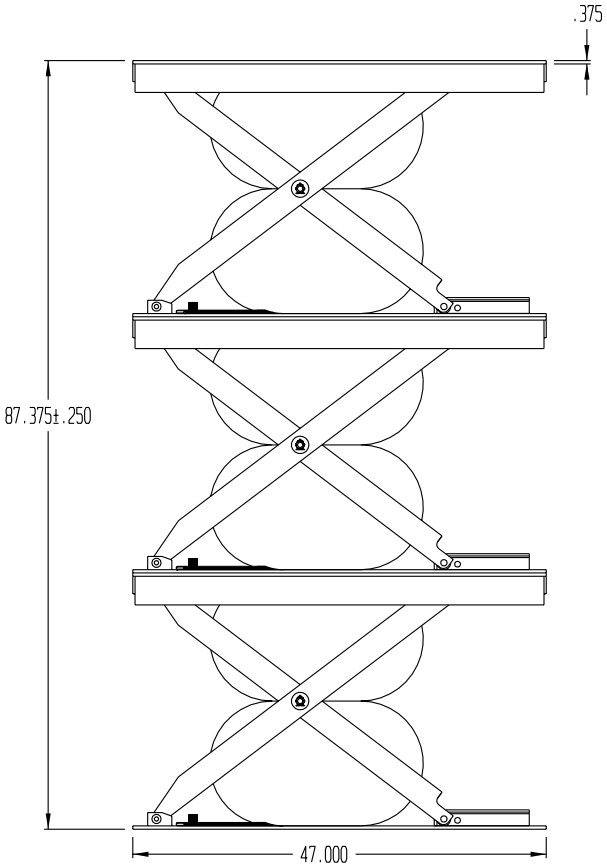

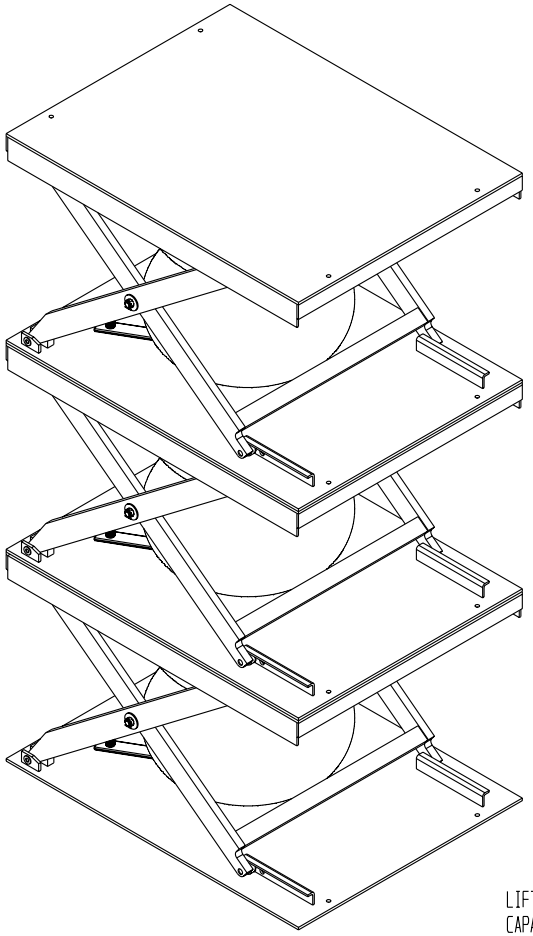

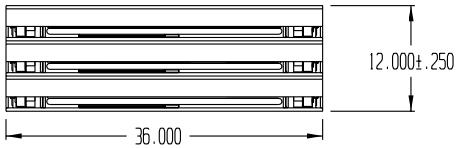

LIFT SPECIFICATIONS
CAPACITY: 5000 LBS
SAFETY FEATURES: PRESSURE RELIEF VALVE

POS	PART#	MATERIAL#	DESCRIPTION	QTY	UNIT

TOLERANCES
UNLESS OTHERWISE NOTED
.X ± .250
.XX ± .125
.XXX ± 0.030
.XXXX ± 0.0050
ANGLE ± 1°

herkules™
2760 RIDGEWAY COURT ○ WALLED LAKE, MI. 48390-1662

TITLE: MODULE LIFT TRIPLE V963

DRN: JP 08-04-06
MATERIAL:
PART #: V963
CHKD. BY:
DWG NO.: 02064052
REV:
REF: